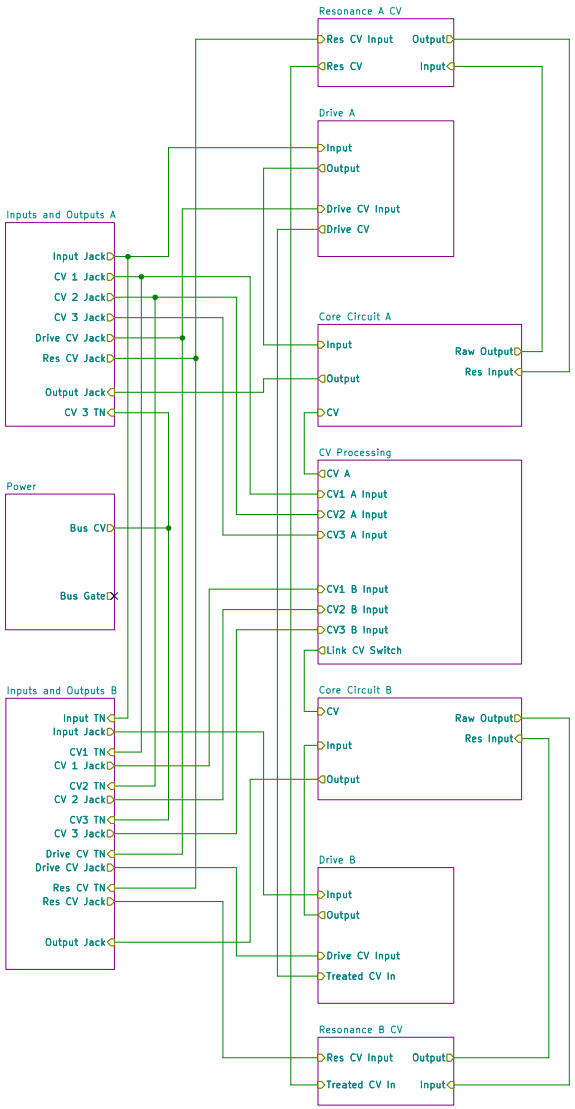

PCB for 15cm Kosmo format synthesizer module

DMH Instruments

Sheet: /

File: DMH_Dual_VCF_Diode_Ladder_Mk2_PCB_1.kicad_sch

Title:

Size: A4	Date:	**Rev: 1**
KiCad E.D.A. 9.0.7		Id: 1/11

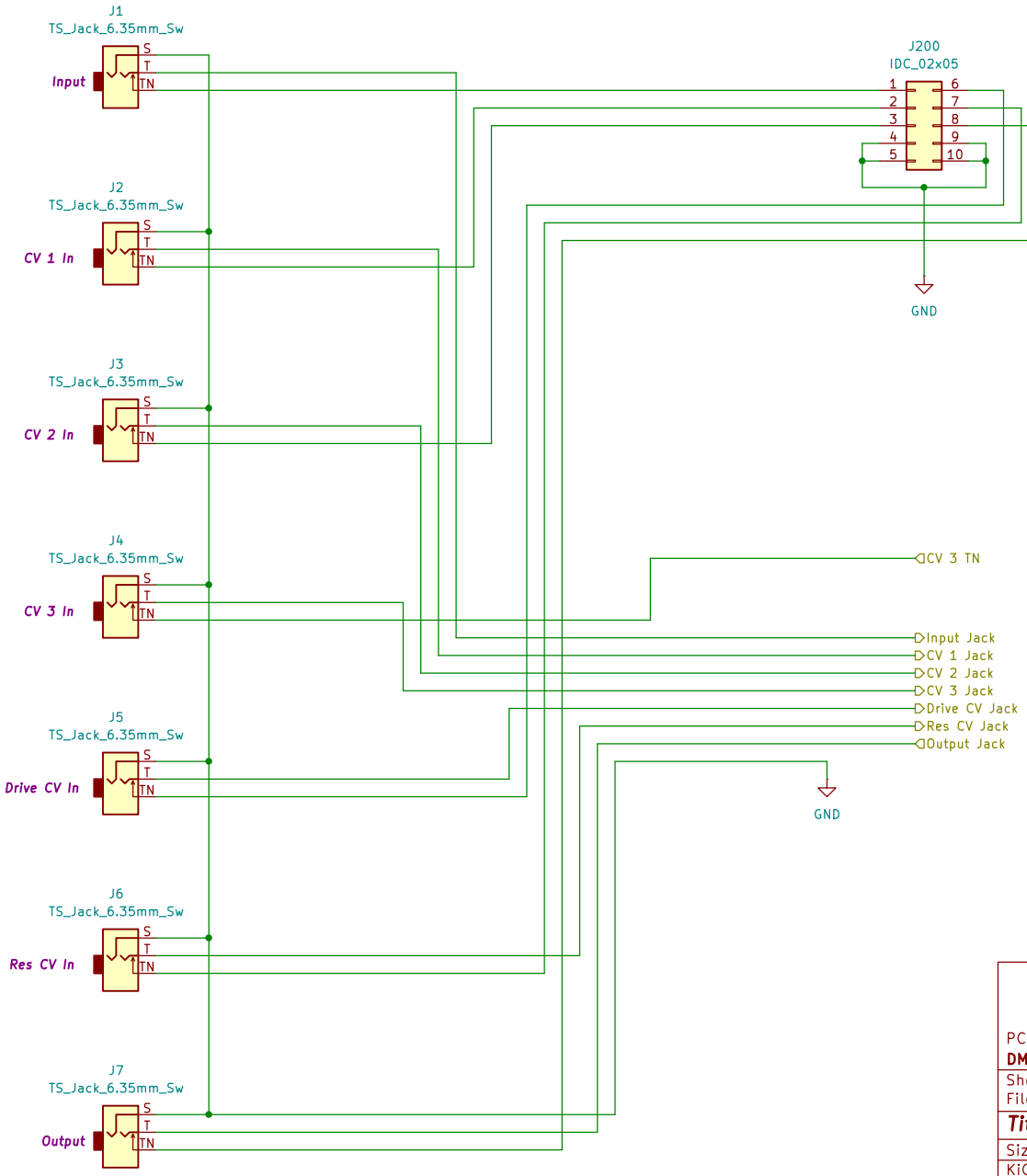

PCB for 15cm Kosmo format synthesizer module

DMH Instruments

Sheet: /Inputs and Outputs A/

File: Inputs_and_Outputs_A.kicad_sch

Title:

Size: A4	Date:	**Rev:**
KiCad E.D.A. 9.0.7		Id: 2/11

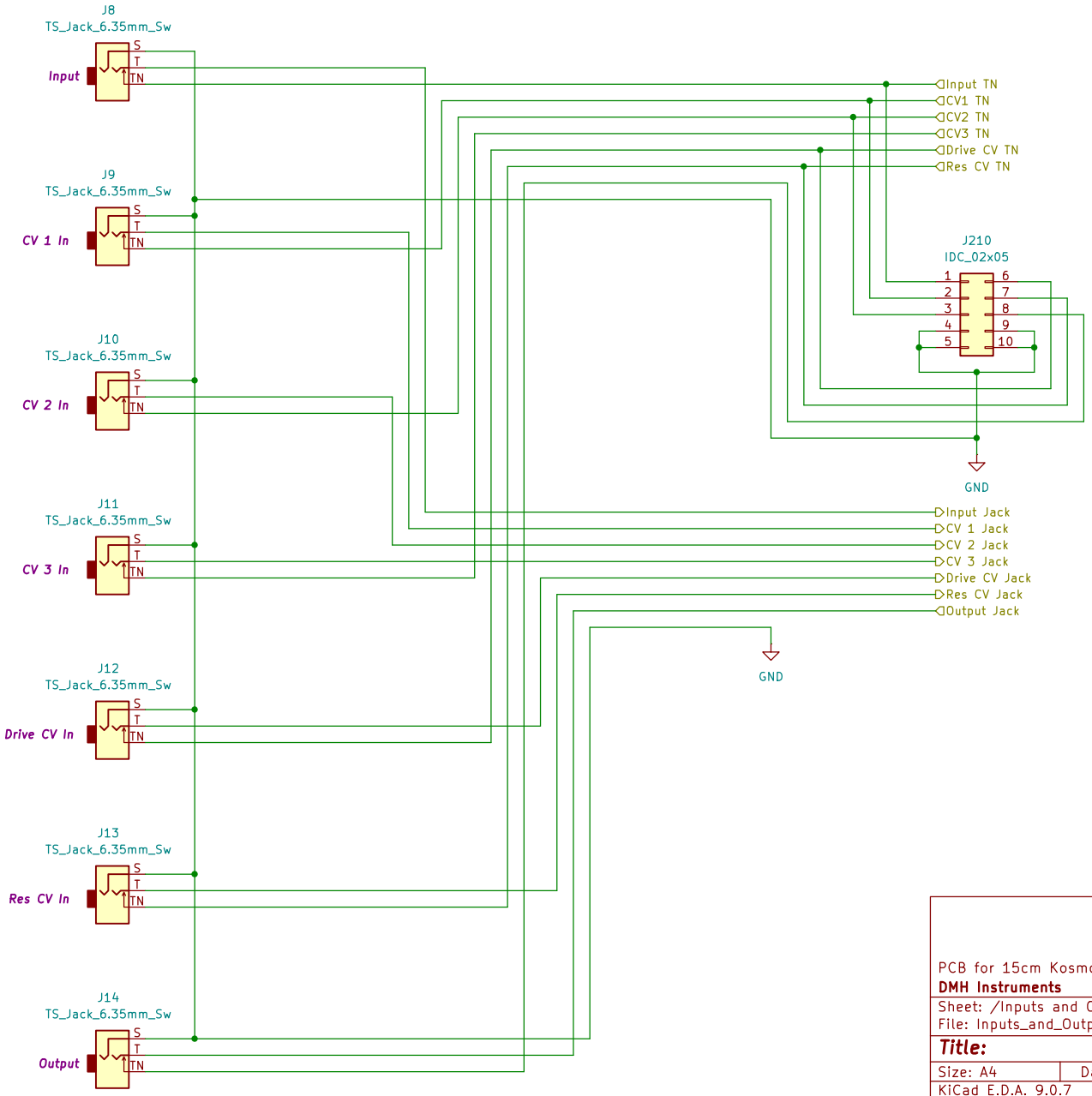

PCB for 15cm Kosmo format synthesizer module

DMH Instruments

Sheet: /Inputs and Outputs B/

File: Inputs_and_Outputs_B.kicad_sch

Title:

Size: A4	Date:	**Rev:**
KiCad E.D.A. 9.0.7		Id: 3/11

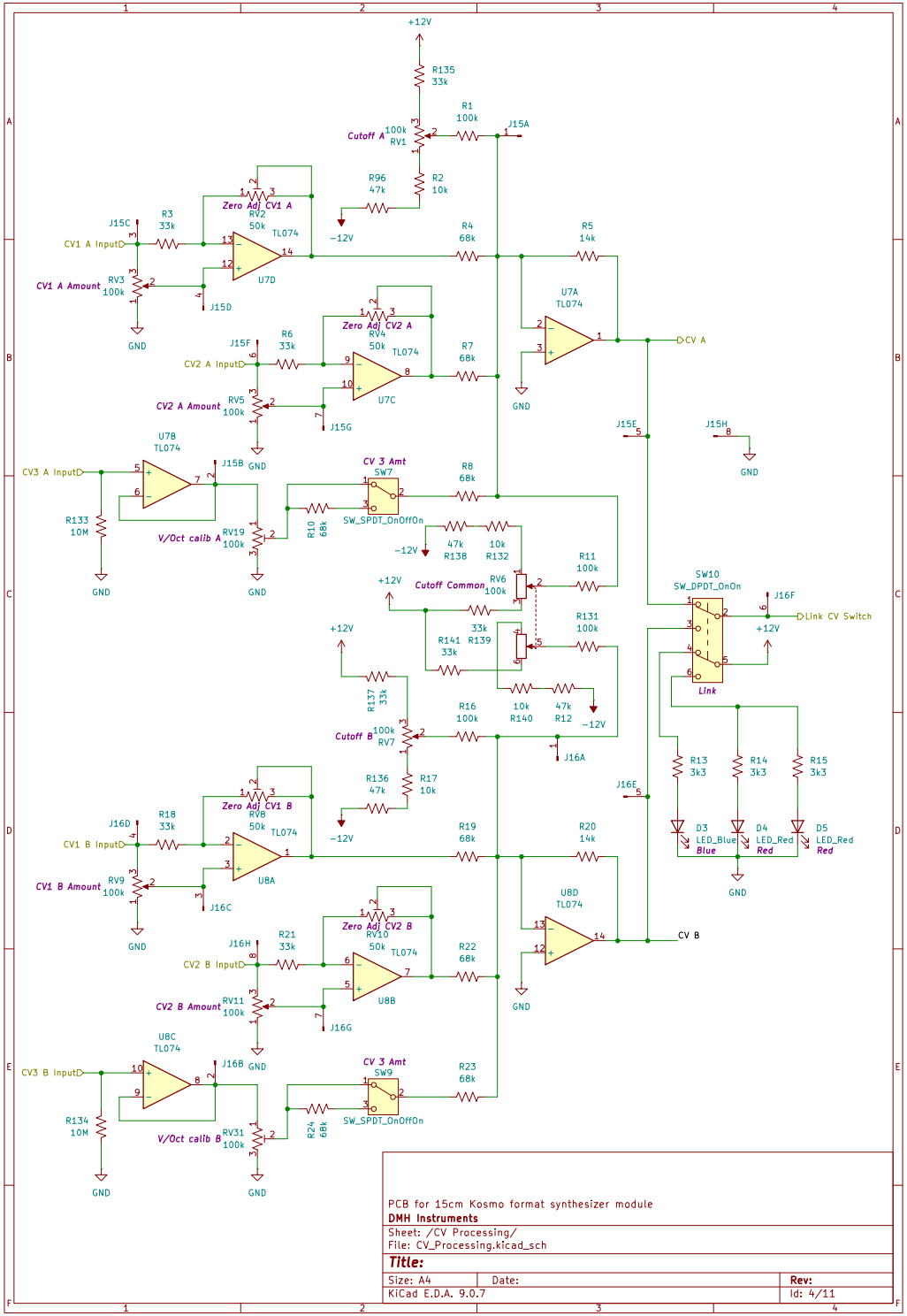

PCB for 15cm Kosmo format synthesizer module

DMH Instruments

Sheet: /CV Processing/

File: CV_Processing.kicad_sch

Title:

Size: A4	Date:	**Rev:**
KiCad E.D.A. 9.0.7		Id: 4/11

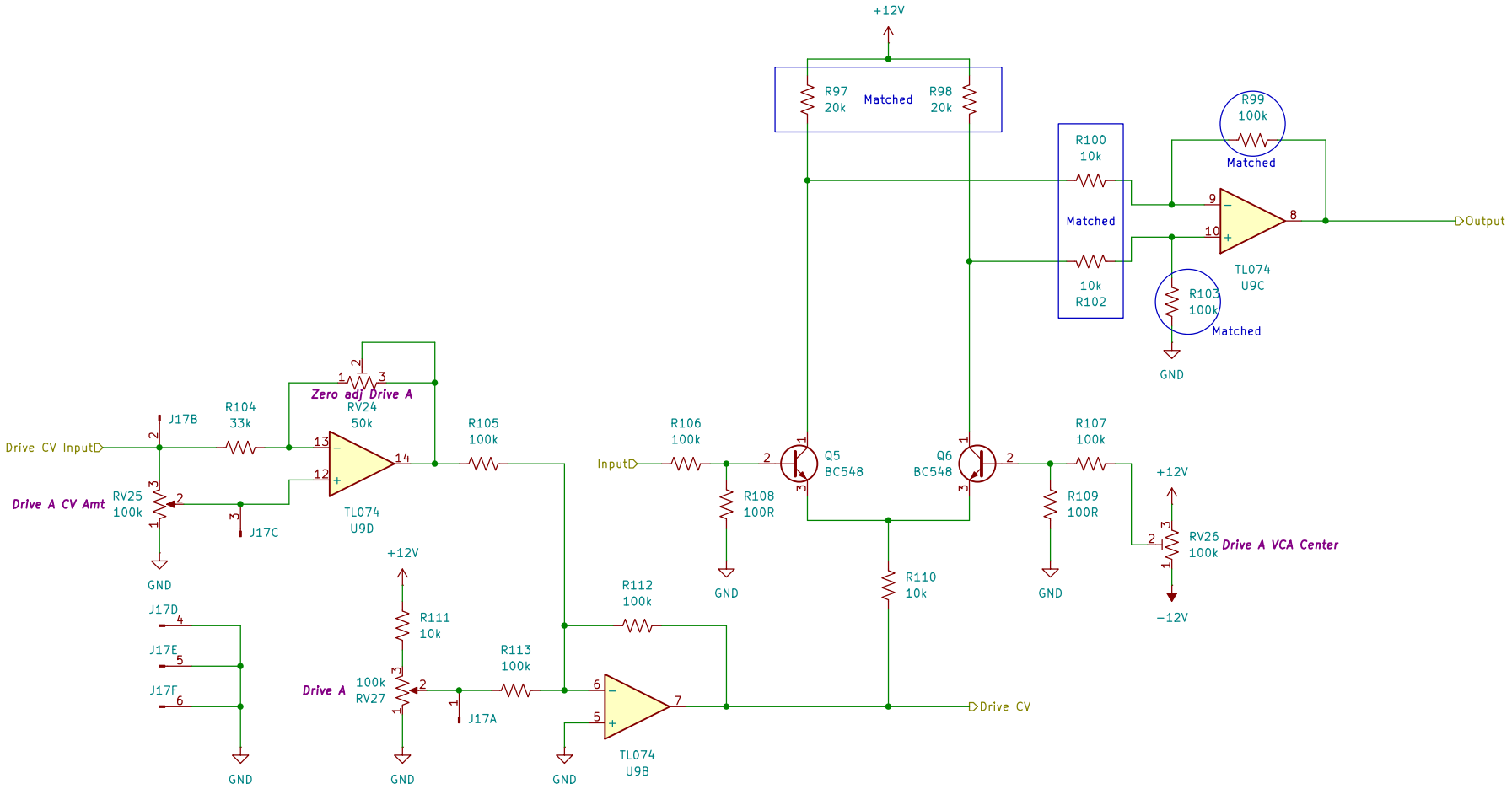

PCB for 15cm Kosmo format synthesizer module

DMH Instruments

Sheet: /Drive A/

File: Drive_A.kicad_sch

Title:

Size: A4	Date:	Rev:
KiCad E.D.A. 9.0.7		Id: 5/11

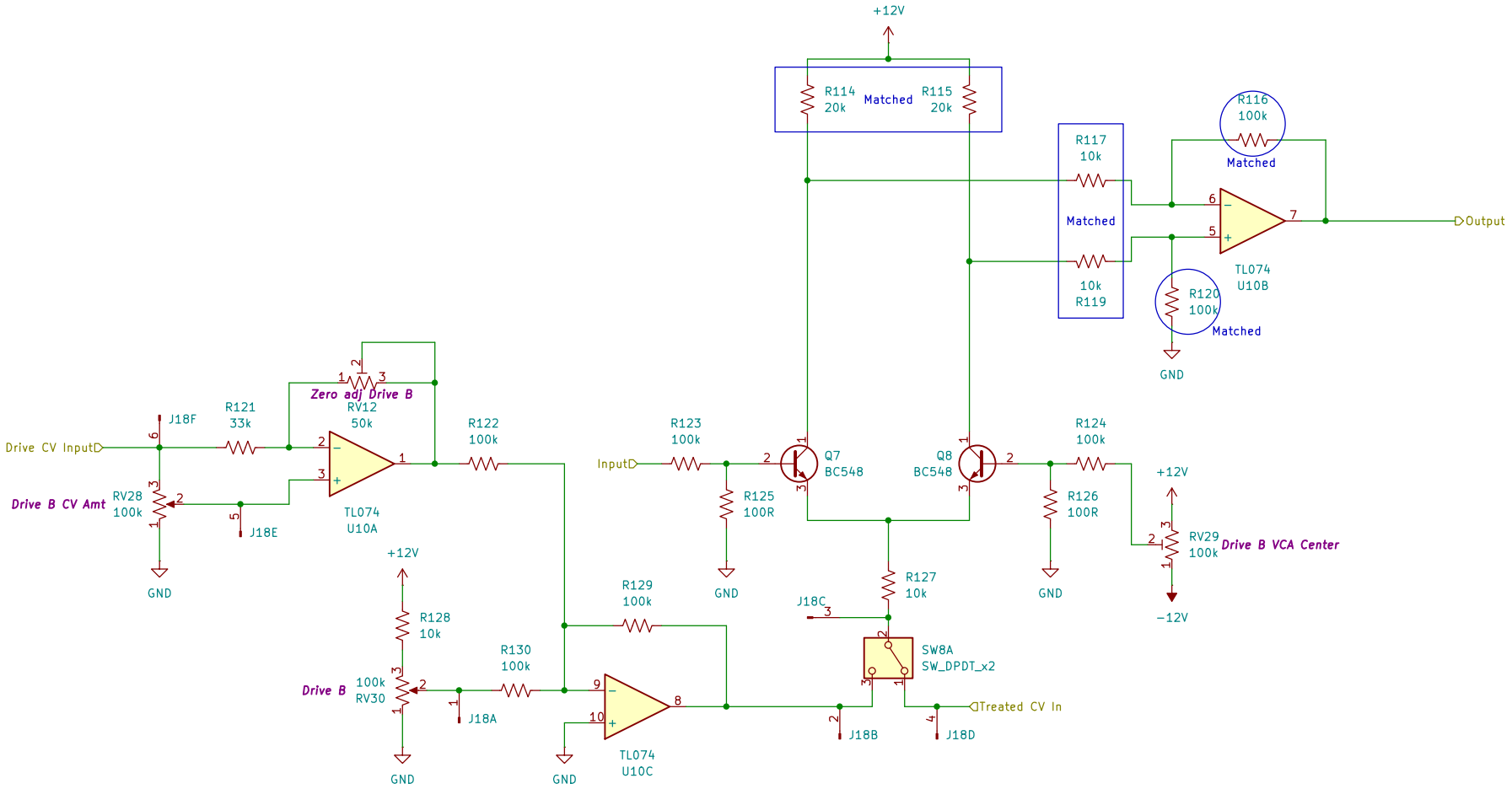

PCB for 15cm Kosmo format synthesizer module

DMH Instruments

Sheet: /Drive B/

File: Drive_B.kicad_sch

Title:

Size: A4	Date:	Rev:
KiCad E.D.A. 9.0.7		Id: 6/11

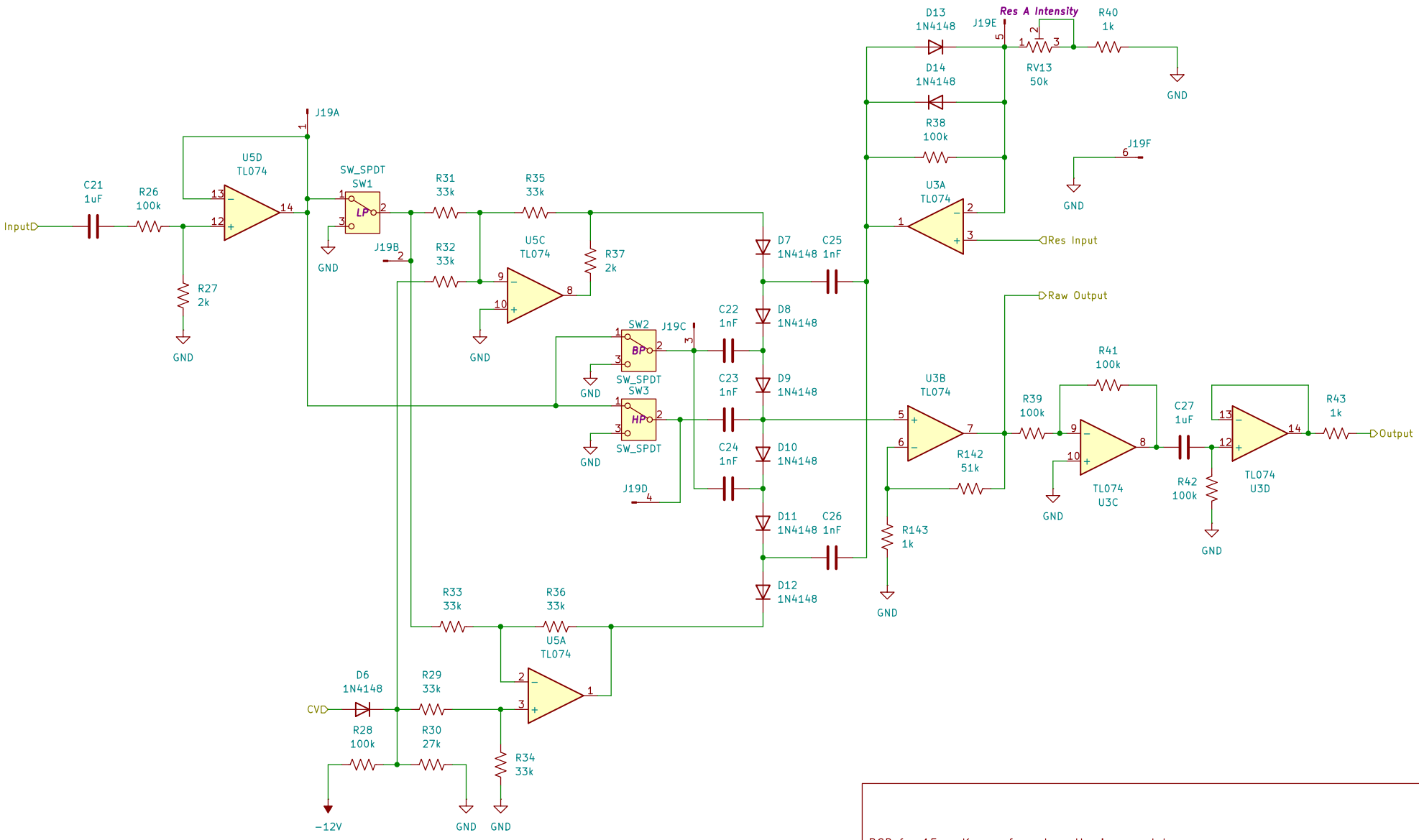

PCB for 15cm Kosmo format synthesizer module

DMH Instruments

Sheet: /Core Circuit A/

File: Core_Circuit_A.kicad_sch

Title:

Size: A4	Date:	Rev:
KiCad E.D.A. 9.0.7		Id: 7/11

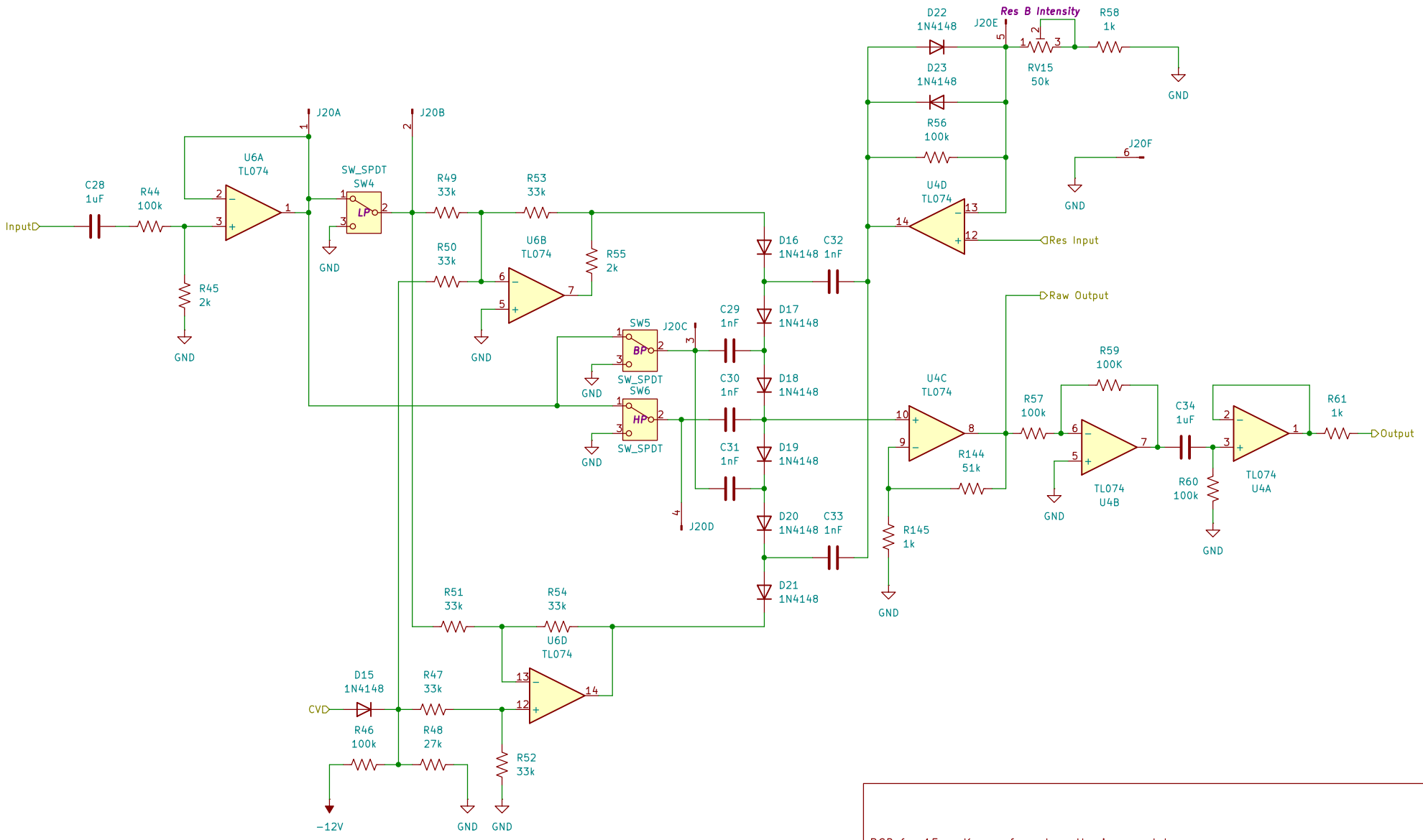

PCB for 15cm Kosmo format synthesizer module

DMH Instruments

Sheet: /Core Circuit B/

File: Core_Circuit_B.kicad_sch

Title:

Size: A4	Date:	Rev:
KiCad E.D.A. 9.0.7		Id: 8/11

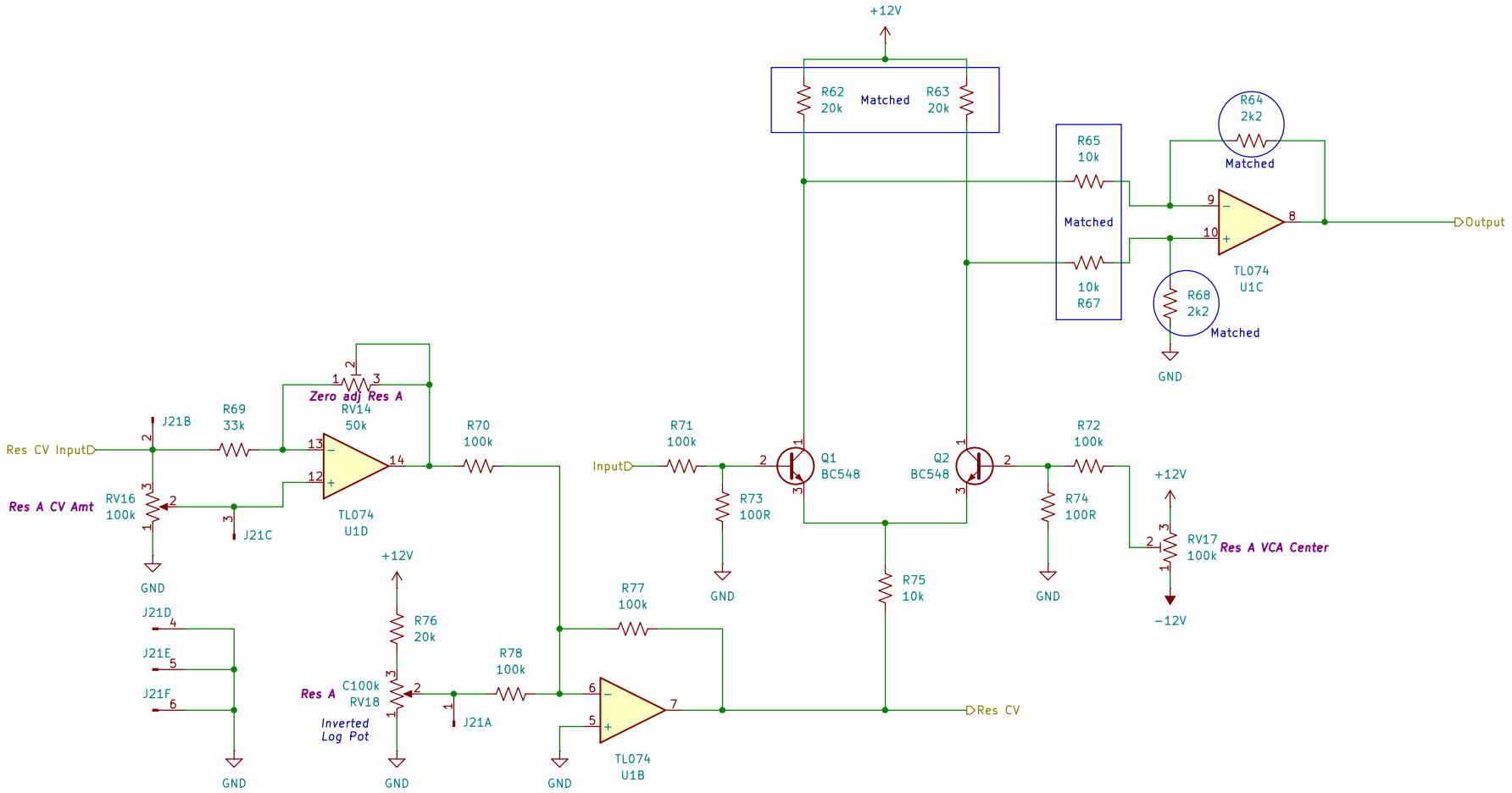

PCB for 15cm Kosmo format synthesizer module

DMH Instruments

Sheet: /Resonance A CV/

File: Resonance_A_CV.kicad_sch

Title:

Size: A4	Date:	Rev:
KiCad E.D.A. 9.0.7		Id: 9/11

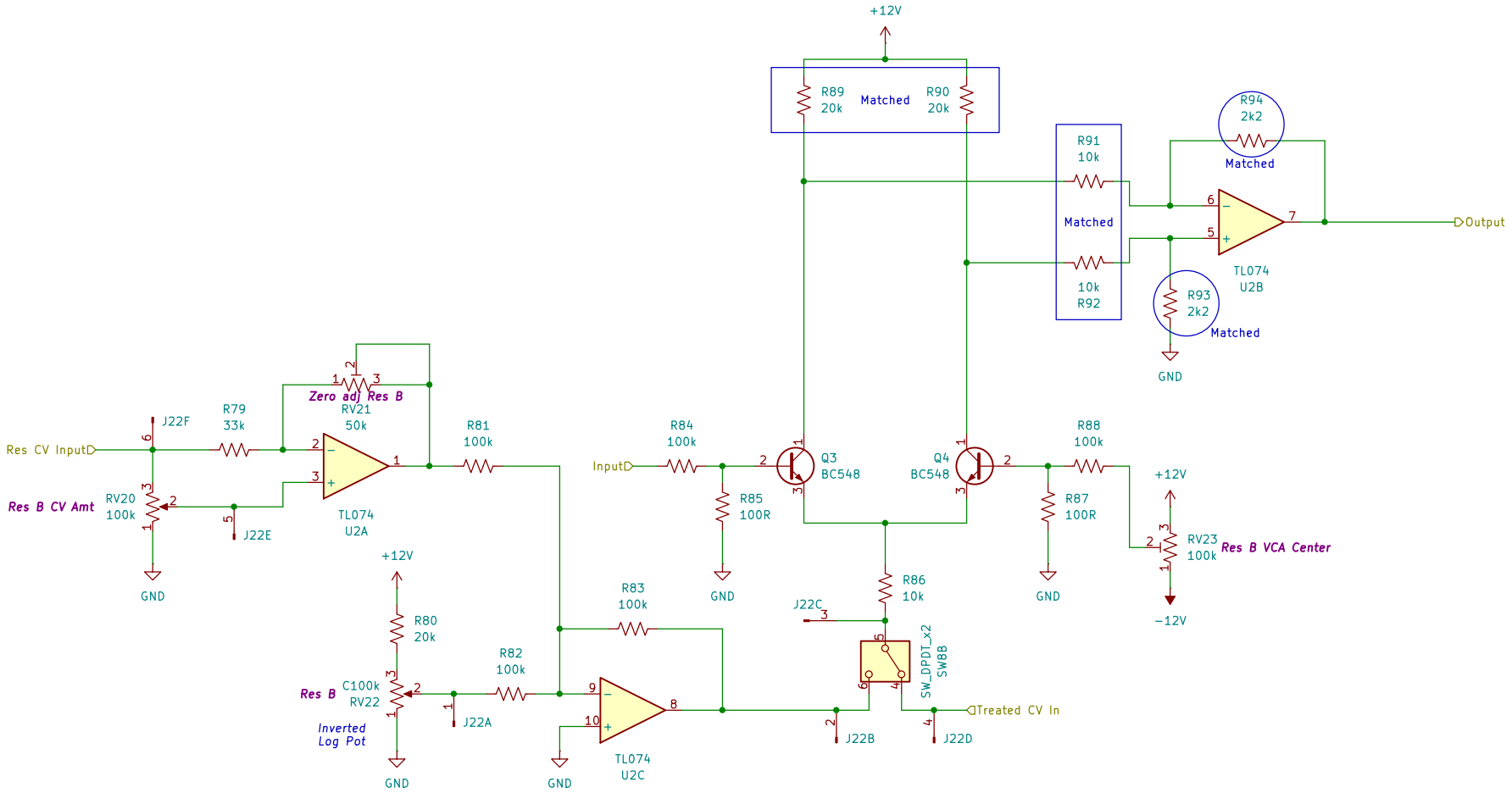

PCB for 15cm Kosmo format synthesizer module

DMH Instruments

Sheet: /Resonance B CV/

File: Resonance_B_CV.kicad_sch

Title:

Size: A4	Date:	**Rev:**
KiCad E.D.A. 9.0.7		Id: 10/11

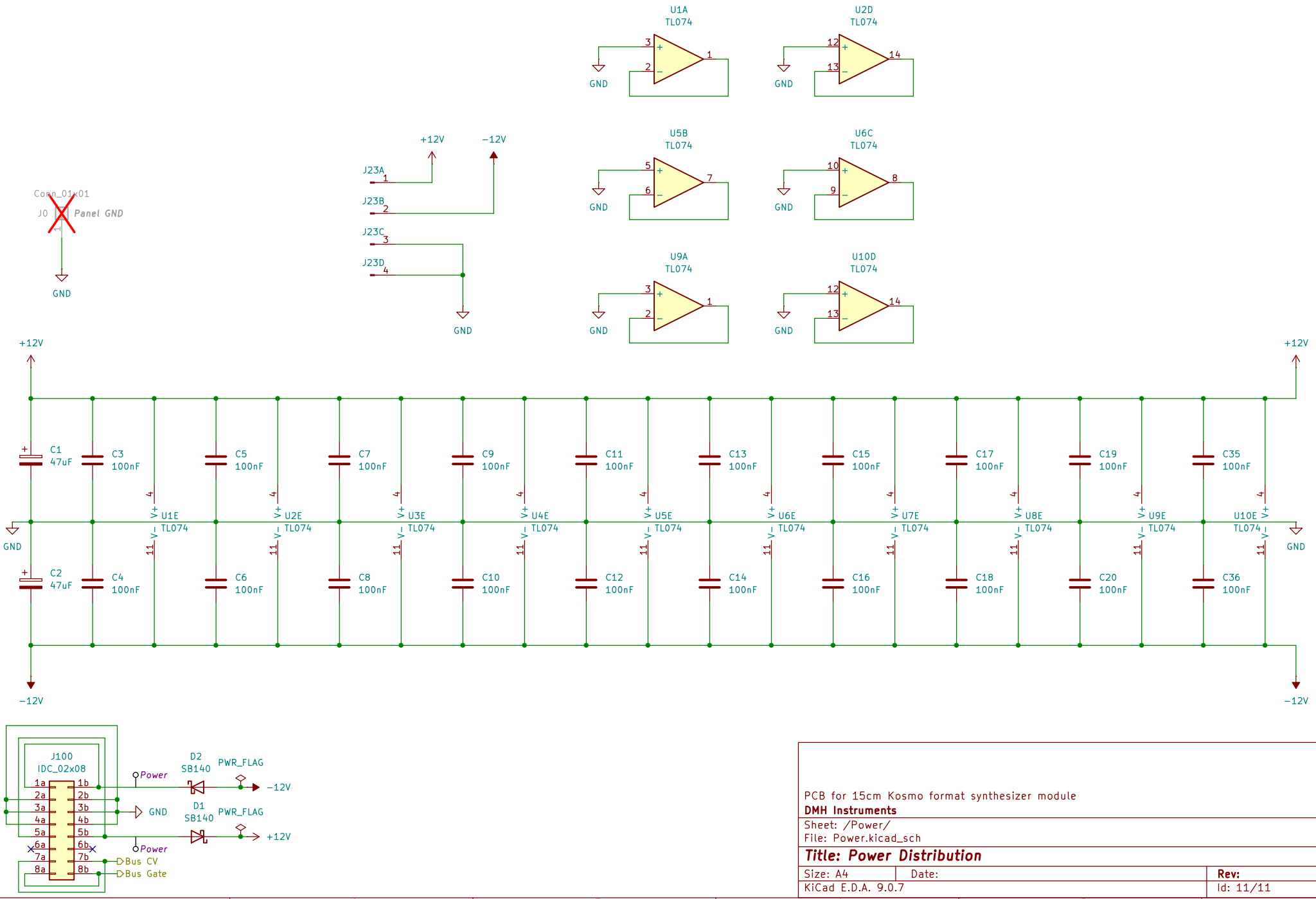

PCB for 15cm Kosmo format synthesizer module

DMH Instruments

Sheet: /Power/

File: Power.kicad_sch

Title: Power Distribution

Size: A4	Date:	**Rev:**
KiCad E.D.A. 9.0.7		Id: 11/11